Technical Data
FLIR A5 f=9 mm

Part number:
62209-0101

Copyright

© 2012, FLIR Systems, Inc.

All rights reserved worldwide. Names and marks appearing herein are either registered trademarks or trademarks of FLIR Systems and/or its subsidiaries. All other trademarks, trade names or company names referenced herein are used for identification only and are the property of their respective owners.

October 26, 2012, 05:38 AM

Corporate Headquarters

FLIR Systems, Inc.
27700 SW Parkway Ave.
Wilsonville, OR 97070
USA
Telephone: +1-503-498-3547

Website

http://www.flir.com

Customer support

http://support.flir.com

Legal disclaimer

Specifications subject to change without further notice. Camera models and accessories subject to regional market considerations. License procedures may apply.

Information and equipment described herein may require US Government authorization for export purposes. Diversion contrary to US law is prohibited.

General description

The FLIR A5 camera has features and functions that make it the natural choice for anyone who uses PC software to solve problems and for whom 80 × 64 pixel resolution is sufficient.
Among its main features are GigE Vision and GenICam compliance, which makes it plug-and-play when used with software packages such as IMAQ Vision and Halcon.

Key features:

- Very affordable
- Compact (40 x 43 x 106 mm)
- GigE Vision and GenICam compliant
- GigE Vision lockable connector
- PoE (power over Ethernet)
- 8- and 14-bit 80 × 64 images streamed at 60 Hz, signal linear
- High frame rates (60 Hz)
- Synchronization between cameras possible
- 1x+1x GPIO
- Compliant with any software that supports GenICam, including National Instruments IMAQ Vision, Stemmers Common Vision Blox, and COGNEX Vision Pro

Typical applications:

- Automation, thermal machine vision
- Entry level “high speed” R&D

Imaging and optical data

IR resolution	80 × 64 pixels
Thermal sensitivity/NETD	< 0.05°C @ +30°C (+86°F) / 50 mK
Field of view (FOV)	25° × 20°
Focal length	9 mm (0.35 in.)
Spatial resolution (IFOV)	5.56 mrad
F-number	1.25
Image frequency	60 Hz
Focus	Fixed

Detector data

Detector type	Focal Plane Array (FPA), Uncooled VOX microbolometer
Spectral range	7.5–13 µm
Detector pitch	50 µm
Detector time constant	Typical 12 ms

Measurement

Object temperature range	–40 to +160°C (–40 to 320°F) –40 to +550°C (–40 to +1022°F)
Accuracy	±5°C (±9°F) or ±5% of reading

Ethernet

Ethernet	Control and image
Ethernet, type	Gigabit Ethernet
Ethernet, standard	IEEE 802.3
Ethernet, connector type	RJ-45

P/N: 62209-0101

© 2012, FLIR Systems, Inc.
All rights reserved worldwide.

Ethernet	
Ethernet, communication	GigE Vision ver. 1.2 Client API GenICam compliant
Ethernet, image streaming	8-bit monochrome @ 60 Hz - Signal linear/ DDE - Automatic/ Manual - Flip H&V 14-bit 80 × 64 pixels @ 60 Hz - Signal linear/ DDE GigE Vision and GenICam compatible
Ethernet, power	Power over Ethernet, PoE IEEE 802.3af class 0 Power
Ethernet, protocols	TCP, UDP,ICMP, IGMP, DHCP, GigEVision

Digital input/output	
Digital input, purpose	General purpose
Digital input	1× opto-isolated, “0” < 2, “1”=2–40 VDC
Digital output, purpose	General purpose Output to ext. device (programmatically set)
Digital output	1× opto-isolated, 2–40 VDC, max 185 mA
Digital I/O, isolation voltage	500 VRMS
Digital I/O, supply voltage	2–40 VDC, max 200 mA
Digital I/O, connector type	12-pole M12 connector (shared with Digital Synchronization and External power)

Power system	
External power operation	12/24 VDC, < 2.5 W absolute max
External power, connector type	12-pole M12 connector (shared with Digital I/O and Digital Synchronization)
Voltage	Allowed range 10–30 VDC

Environmental data	
Operating temperature range	–15°C to +50°C (+5°F to +122°F)
Storage temperature range	–40°C to +70°C (–40°F to +158°F)
Humidity (operating and storage)	IEC 60068-2-30/24 h 95% relative humidity +25°C to +40°C (+77°F to +104°F)
EMC	• EN 61000-6-2 (Immunity) • EN 61000-6-3 (Emission) • FCC 47 CFR Part 15 Class B (Emission)
Encapsulation	IP 40 (IEC 60529)
Bump	25 g (IEC 60068-2-29)
Vibration	2 g (IEC 60068-2-6)

Physical data	
Weight	0.200 kg (0.44 lb.)
Camera size (L × W × H)	106 × 40 × 43 mm (4.2 × 1.6 × 1.7 in.)
Tripod mounting	UNC ¼"-20 (on three sides)
Base mounting	4 × M3 thread mounting holes (bottom)
Housing material	Magnesium and aluminum

Shipping information

- Infrared camera with lens
- Cardboard box
- Downloads brochure
- FLIR Tools download card
- FLIR apps card
- Focus adjustment tool
- Getting started guide
- Important information guide
- Optics brochure
- Registration card
- Service & training brochure
- Thank you card
- User documentation CD-ROM

FLIR A5 f=9 mm

P/N: 62209-0101

© 2012, FLIR Systems, Inc.
All rights reserved worldwide.

Optional Accessories

- T951004 Ethernet cable CAT-6, 2m/6.6 ft.
- T198349 Base support
- T198348 Cable kit Mains (UK,EU,US)
- T127605 Cable M12 Pigtail
- T127606 Cable M12 Sync
- T198342 Focus adjustment tool
- T911112 PoE injector
- T198392 Table stand kit

Optional Software

- T197965 FLIR Tools
- T127648 FLIR Tools+ (license only)
- DSW-10000 FLIR IR Camera Player

P/N: 62209-0101

© 2012, FLIR Systems, Inc.
All rights reserved worldwide.

T951004; Ethernet cable CAT-6, 2m/6.6 ft.

General description

This cable is used to connect the infrared camera to Ethernet.

Technical data

Weight	80 g (2.8 oz.)
Cable length	2.0 m (6.6 ft.)
Connector	RJ-45 to RJ-45
Cable type	CAT-6

v1.01

T198349; Base support

General description

Adapter for connecting a tripod.

Technical data

Size (L × W × H)	55 × 34 × 9 mm (2.2 × 1.3 × 0.4 in.)
Color	Black

Shipping information

- Base suppor
- Four screws (plus six extra)

v1.0

P/N: 62209-0101

© 2012, FLIR Systems, Inc.
All rights reserved worldwide.

T198348; Cable kit Mains (UK,EU,US)

General description

Cable kit consisting of three power cables (UK,EU,US).

Technical data

Cable length	1.5 m (4.9 ft.)
Color	Black

Shipping information

- Power cable, UK
- Power cable, EU
- Power cable, US

v1.0

T127605; Cable M12 Pigtail

General description

Cable to access signals in M12 connector, pigtail.

Technical data

Cable length	3 m (9.8 ft.)
Connector	M12 to pigtail
Color	Black

Shipping information

- Cable

v1.0

P/N: 62209-0101

© 2012, FLIR Systems, Inc.
All rights reserved worldwide.

T127606; Cable M12 Sync

General description

Cable to synchronize two cameras, M12 connectors in both ends.

Technical data

Cable length	2 m (6.6 ft.)
Connector	M12 to M12
Color	Black

Shipping information

- Cable

v1.0

T198342; Focus adjustment tool

General description

Focus adjustment tool

Technical data

Size (L × D)	12 × 38 mm (0.47 × 1.50 in.)
Color	Blue

Shipping information

- Focus adjustment tool

v1.0

P/N: 62209-0101

© 2012, FLIR Systems, Inc.
All rights reserved worldwide.

T911112; PoE injector

General description

Power supply, power over Ethernet (PoE) injector.

Technical data

AC operation	Input: 100–240 V, 50–60 Hz
DC operation	Output: 48 VDC
Power	15.4 W
Size (L × W × H)	145 × 61 × 40 mm (5.7 × 2.4 × 1.6 in.)
Color	Black

Shipping information

- Power over Ethernet (PoE) injector

v1.0

T198392; Table stand kit

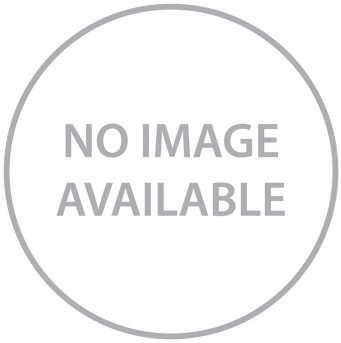

General description

Table stand kit for the FLIR Ax5 series. The kit consists of a base support and a gooseneck.

Technical data

Color	Black

Shipping information

- Base support
- Gooseneck

v1.0

Optional Software

P/N: 62209-0101

© 2012, FLIR Systems, Inc.
All rights reserved worldwide.

T197965; FLIR Tools

General description

FLIR Tools is a software suite specifically designed to provide an easy way to update your camera and create inspection reports.

Key features:

- Report templates (horizontal IR + DC, vertical IR + DC, horizontal IR + IR).
- Import images from your camera to your computer.
- Apply filters when searching for images.
- Search in all texts in images and text annotations.
- Store the five latest search criterias.
- Lay out, move, and resize measurement tools on any infrared image.
- Create PDF imagesheets of any images of your choice.
- Add headers, footers, and logos to the imagesheets.
- Create PDF reports of any images of your choice.
- Add headers, footers, and logotypes to the report.
- Report editor (report page preview and snap to grid).
- Sort function (by date, groups sorted by by path and groups sorted by date)
- Browse and purchase infrared cameras, software, and accessories in our webshop.
- Software localized to 21 languages.
- Camera update (applies to FLIR Exx, T4xx and T6xx series only).

Download

This software is a freeware. To download, click the following link:

http://support.flir.com/SwDownload/app/RssSWDownload.aspx?ID=120

Release notes

Version	FLIR Tools 2.2
New features	• --- News in 2.2: --- • Support for rotating DC images • Improved camera connection • Various bug fixes • --- News in 2.1: --- • New text comment template tab (Create, edit and transfer templates to and from any FLIR camera. Import and export templates.). • Support for MSX (Multi-Spectral Dynamic Imaging) images. • Support for sketch images in both IR and visual with on/off toggling. • Support for same FOV (“Field of View Match”). • Display of compass information in edit and report mode. • Display of GPS information in edit and in report mode (Direct link to Google Maps for GPS-tagged images from the report). • Support for FLIR A3x5 and A6x5. • Camera tab (Logging feature. Colorized status of camera availability). • An updated toolbar in the edit window. • Support for FLIR T4xx camera models when updating the camera. • Various bug fixes.

P/N: 62209-0101

© 2012, FLIR Systems, Inc.
All rights reserved worldwide.

Shipping information

- Digital download, or
- CD-ROM

System requirements

Operating system	• Windows XP, 32-bit • Windows Vista, 32-bit • Windows 7, 32-bit • Windows 7, 64-bit

v1.10

T127648; FLIR Tools+ (license only)

General description

Compared to FLIR Tools, FLIR Tools+ has the following features:
- Radiometric sequence recording
- Playback of recordings
FLIR Tools/Tools+ is a software suite specifically designed to provide an easy way to update your camera and create inspection reports.

FLIR Tools main features:

- Report templates (horizontal IR + DC, vertical IR + DC, horizontal IR + IR).
- Import images from your camera to your computer.
- Apply filters when searching for images.
- Search in all texts in images and text annotations.
- Store the five latest search criterias.
- Lay out, move, and resize measurement tools on any infrared image.
- Create PDF imagesheets of any images of your choice.
- Add headers, footers, and logos to the imagesheets.
- Create PDF reports of any images of your choice.
- Add headers, footers, and logotypes to the report.
- Report editor (report page preview and snap to grid).
- Sort function (by date, groups sorted by by path and groups sorted by date)
- Browse and purchase infrared cameras, software, and accessories in our webshop.
- Software localized to 21 languages.
- Camera update (applies to FLIR Exx, T4xx and T6xx series only).

Download

Download your copy of FLIR Tools+ here:

http://support.flir.com/toolsplus

Release notes

Version	FLIR Tools+ 2.2

P/N: 62209-0101

© 2012, FLIR Systems, Inc.
All rights reserved worldwide.

Release notes

New features	• --- News in 2.2: --- • Radiometric sequence recording • Playback of recordings • --- News in 2.1: --- • New text comment template tab (Create, edit and transfer templates to and from any FLIR camera. Import and export templates.). • Support for MSX (Multi-Spectral Dynamic Imaging) images. • Support for sketch images in both IR and visual with on/off toggling. • Support for same FOV (“Field of View Match”). • Display of compass information in edit and report mode. • Display of GPS information in edit and in report mode (Direct link to Google Maps for GPS-tagged images from the report). • Support for FLIR A3x5 and A6x5. • Camera tab (Logging feature. Colorized status of camera availability). • An updated toolbar in the edit window. • Support for FLIR T4xx camera models when updating the camera. • Various bug fixes.

Shipping information

- FLIR Tools+ scratchcard

System requirements

Operating system	• Windows XP, 32-bit • Windows Vista, 32-bit • Windows 7, 32-bit • Windows 7, 64-bit

v1.03

DSW-10000; FLIR IR Camera Player

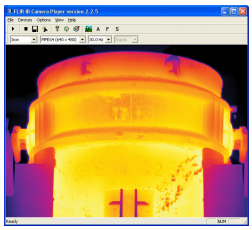

General description

FLIR IR Camera Player is a PC-based remote control and viewer that you can use with cameras from FLIR Systems.

You can perform one or more of the following with FLIR IR Camera Player:

- Record a video stream from the camera.
- Save a frame from the video stream as a snapshot image (*.bmp).
- Autofocus, focus far, and focus near.
- Autoadjust the camera image.
- Freeze the camera image.
- Save a camera image in the camera.
- Change Color palette.
- Add an image description and a text comment to an image.

You connect a camera in one of the following ways:

- Ethernet
- FireWire
- USB

Download

This software is a freeware. To download, click the following link:

http://support.flir.com/SwDownload/app/RssSWDownload.aspx?ID=89

Release notes

Version	2.2.7

Optional Software

P/N: 62209-0101

© 2012, FLIR Systems, Inc.
All rights reserved worldwide.

Release notes	
New features	• --- News in 2.2.7 • Added support for FLIR Ax5 series. • --- News in 2.2.6 • Various bug fixes.

System requirements	
Operating system	• Windows XP, 32-bit • Windows Vista, 32-bit/64-bit • Windows 7, 32-bit/64-bit

v1.03

This document must not be communicated or copied completely or in part, without our permission. Any infringement will lead to legal proceedings.
FLIR SYSTEMS AB

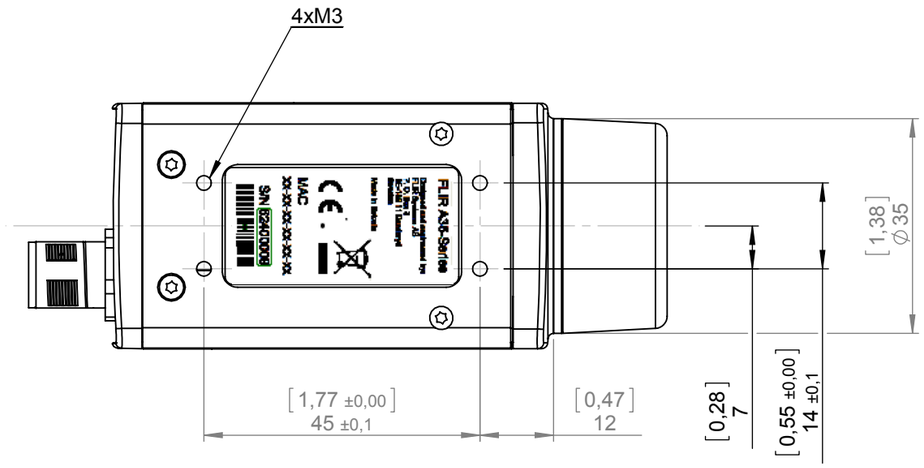

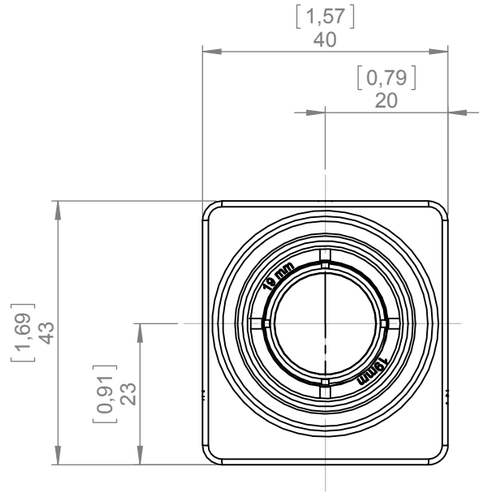

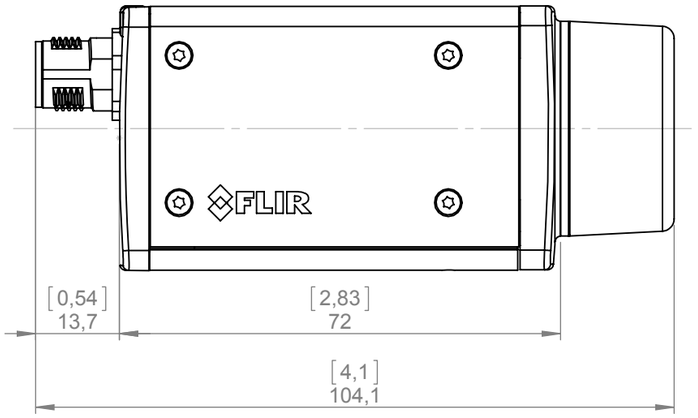

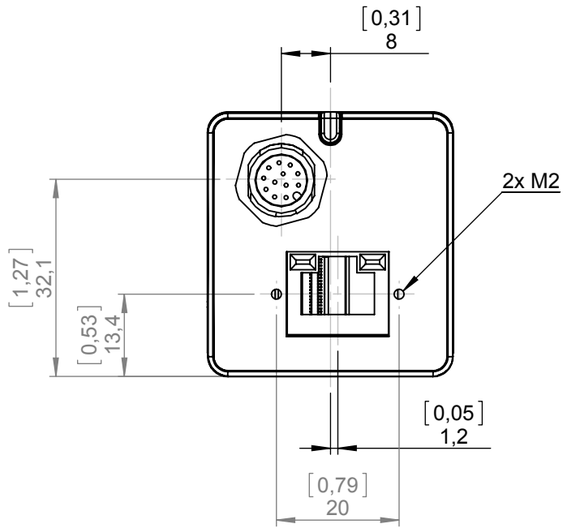

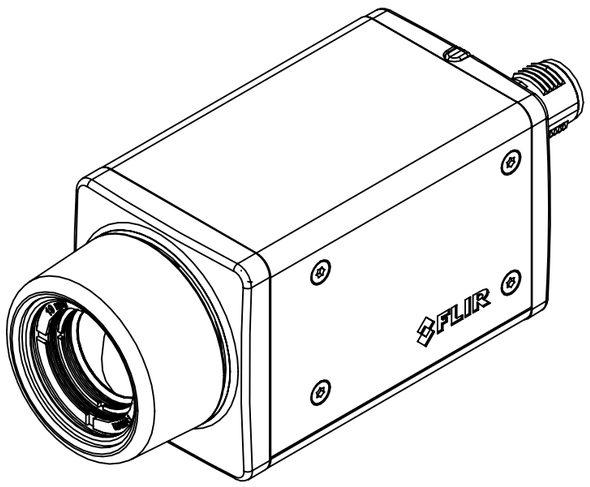

-

Konstr/Drawn: P. MARCUS	Datum/Date: 2011-08-19	Kontr/Check: BEEH	Material: -
Ändrad av/Modified by: P. MARCUS	Ändrad/Modified: 2012-05-07	Ytjämnhet/Roughness: Ra µm	Ytbehandling/Surface treatment

Där ej annat anges/Unless otherwise stated
Gen tol ISO 2768-mK
Utdrag ur/Excerpt from ISO 2768-m

0,5-6	±0,1	Hålkälsradier
(6)-30	±0,2	Fillet radii
(30)-120	±0,3	
(120)-400	±0,5	Kanter brutna
(400)-1000	±0,8	Edges broken

Benämning/Denomination: Ax5 Assy

Skala/Scale: 1:1			Blad/Sheet: 1(2)
ArtNo.: T198121			Size: A3
Ritn nr/Drawing No: T198121			Rev: A

Denna handling får ej delges annan, kopieras i sin helhet eller delar utan vårt medgivande. Överträdelse härav beivras med stöd av gällande lag.
FLIR SYSTEMS AB

REVISIONS				
ZONE	REV	DESCRIPTION	DATE	APPROVED
	100	INITIAL RELEASE ECN 115992	10/17/11	BC

NOTES: UNLESS OTHERWISE SPECIFIED

1. INDICATED DIMENSIONS ARE FOR AN ARRAY SIZE OF 324x256.
2. CONNECTOR INTERFACE: HIROSE 50 PIN DF12-50DS-0.5V(86). MATING CONNECTOR P/N DF12(5.0)-50DP-0.5V(86). FOR PIN-OUT DESIGNATIONS SEE TAU CAMERA USERS MANUAL.
3. INDICATED TOLERANCES APPLY TO CAMERA MOUNTING SURFACES ONLY. OTHER SURFACES ARE CAST AND HAVE DRAFT.
4. INDICATED ALLOWABLE TRAVEL FOR FOCUS.
5. CAMERA WEIGHT NO LENS: 50.5 GRAMS, LENS WEIGHT, 9mm-f1.25: 20.5 GRAMS TOTAL CAMERA WEIGHT: 71.0 GRAMS

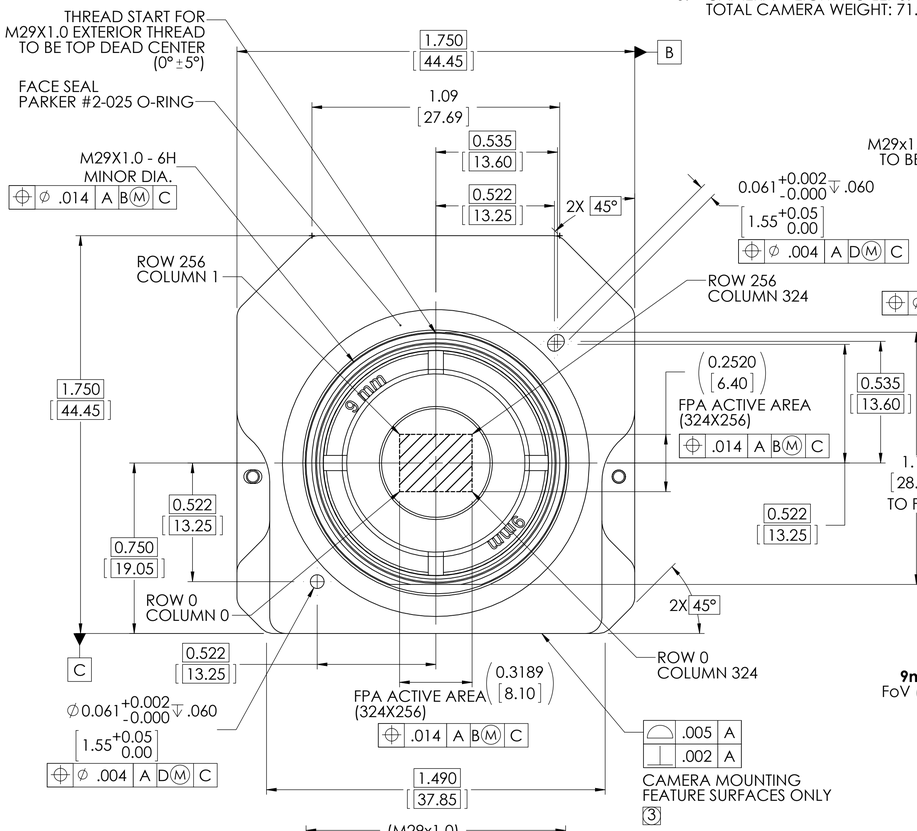

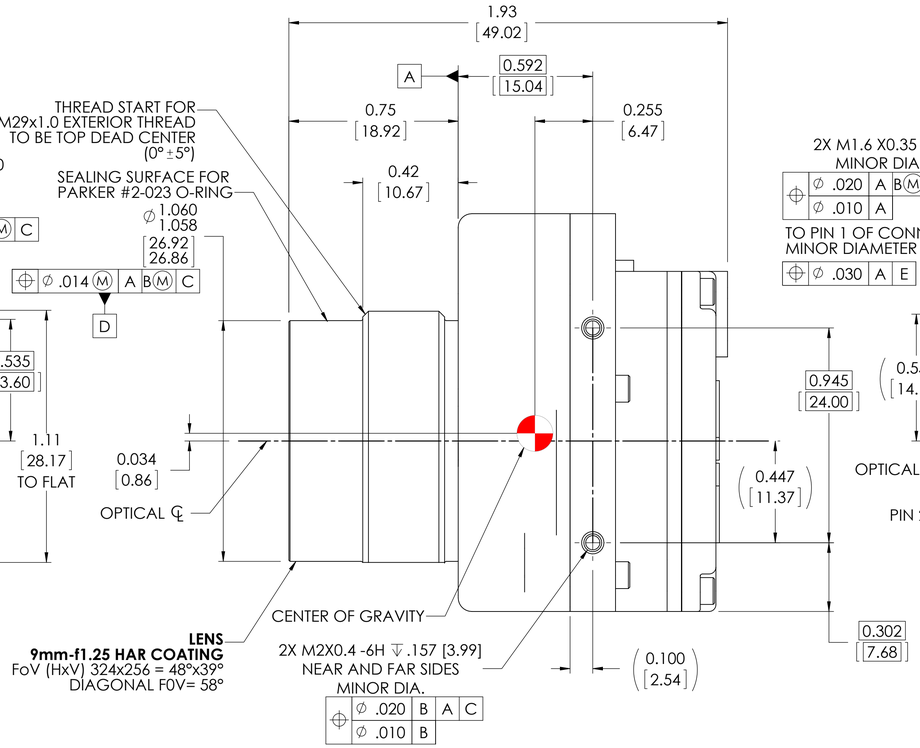

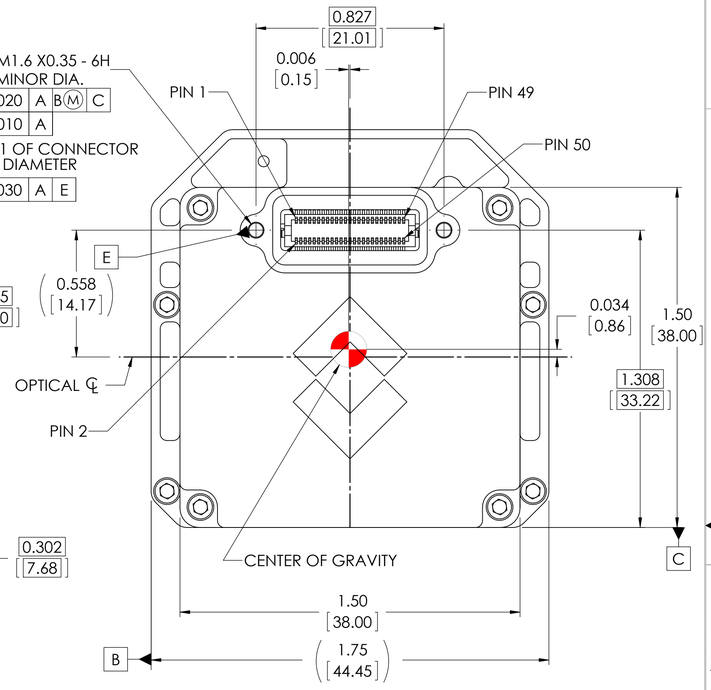

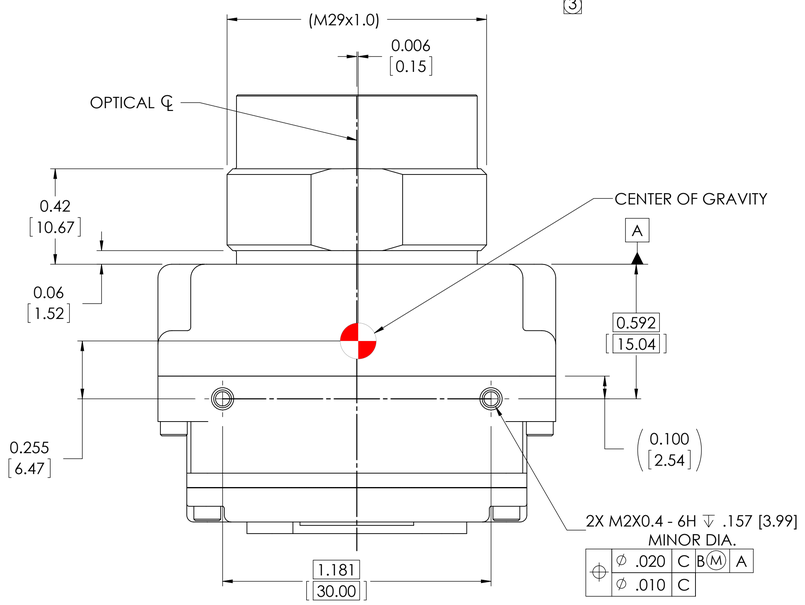

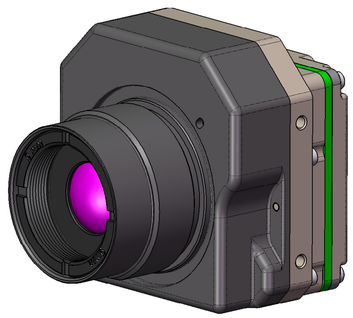

THIRD ANGLE PROJECTION

THIS DOCUMENT IS CONTROLLED TO FLIR TECHNOLOGY LEVEL 1.

THE INFORMATION CONTAINED IN THIS DOCUMENT PERTAINS TO A DUAL USE PRODUCT CONTROLLED FOR EXPORT BY THE EXPORT ADMINISTRATION REGULATIONS (EAR). FLIR TRADE SECRETS CONTAINED HEREIN ARE SUBJECT TO DISCLOSURE RESTRICTIONS AS A MATTER OF LAW. DIVERSION CONTRARY TO US LAW IS PROHIBITED. US DEPARTMENT OF COMMERCE AUTHORIZATION IS NOT REQUIRED PRIOR TO EXPORT OR TRANSFER TO FOREIGN PERSONS OR PARTIES UNLESS OTHERWISE PROHIBITED.

INTERPRET DRAWING PER ASME Y14.5M-1994

UNLESS OTHERWISE SPECIFIED
SURFACE ROUGHNESS 32
.X = ±.1
.XX = ±.01
.XXX = ±.005
ANGULAR = ±.5°
FILLET RADII = .005 MAX

MATERIAL

FINISH

UNLESS OTHERWISE SPECIFIED ALL MEASUREMENTS ARE IN INCHES. ALL DIMENSIONS IN [ ] ARE MM. DO NOT SCALE DRAWING.

CALC WT: 71.00 GRAMS

PROJECT NO.

APPROVALS	DATE
DWN M. HOPKINS	10/17/11
CHK	
DSGN	
ENG	
APP	

FLIR Systems, Inc.
70 Castilian Drive
Goleta, CA 93117

TITLE: IDD, TAU CAMERA, 9mm-f1.25, 25um 324x256

SIZE D | CAGE 064Y2 | DWG NO. 46-324, 9mm-f1.25 | REV 100

SCALE 3:1 | PRINTED: 11/1/2011 | SHEET 1 OF 2

SOLIDWORKS MODEL: 46-Tau Camera Core
MODEL REVISION: B-WC

DWG NO. 46-324, 9mm-f1.25 SH 1 REV 100

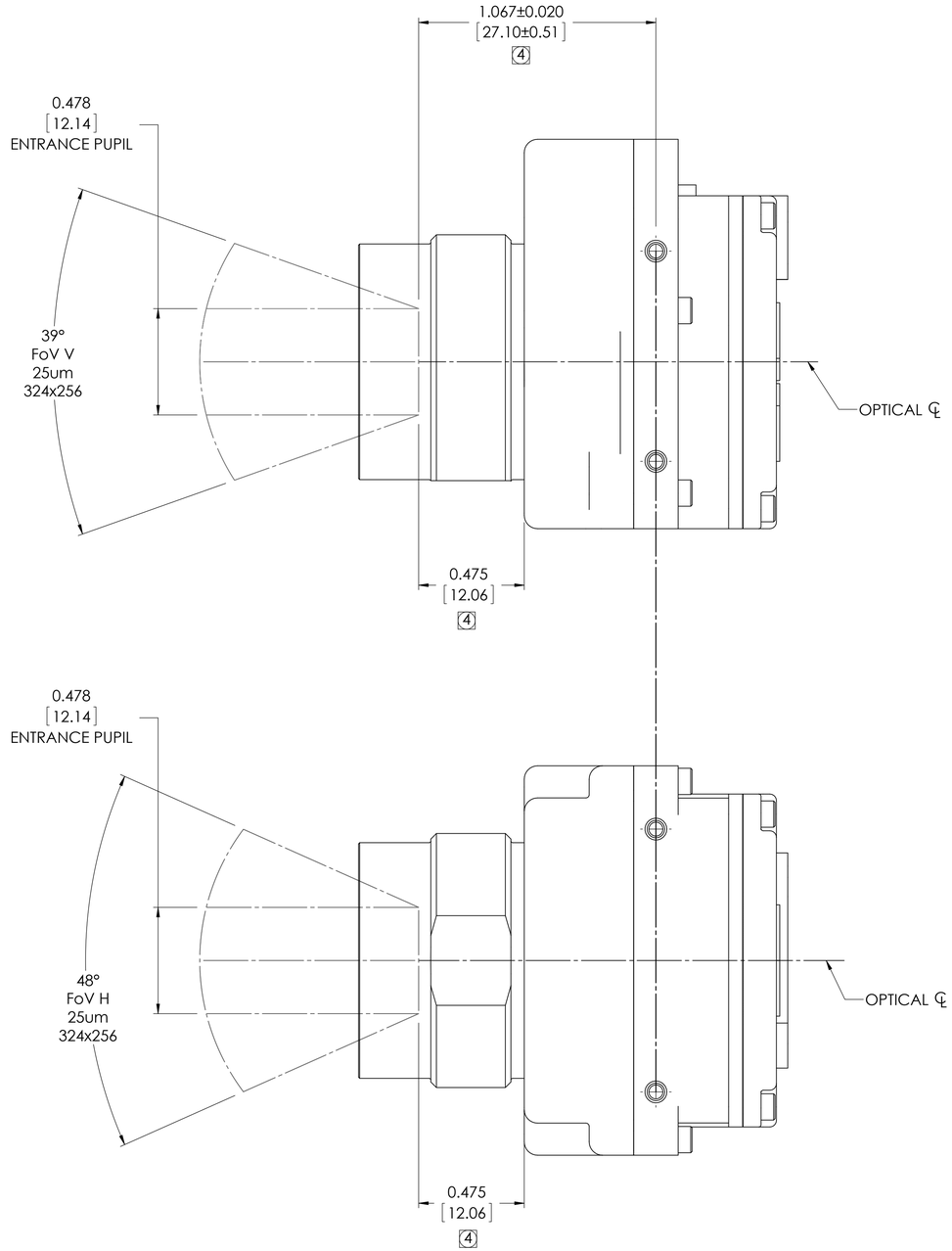

9 mm-f1.25
324x 256 ARRAY

IDD, TAU CAMERA,
9mm-f1.25, 25um 324x256

SIZE	CAGE	DWG NO.	REV
D	064Y2	**46-324, 9mm-f1.25**	100
SCALE 3:1	PRINTED: 11/1/2011	SHEET 2 OF 2	

SOLIDWORKS MODEL: 46-Tau Camera Core
MODEL REVISION:B-WC

DWG NO. 46-324, 9mm-f1.25 | SH 2 | REV 100

REVISIONS				
ZONE	REV	DESCRIPTION	DATE	APPROVED
	100	INITIAL RELEASE ECN 115992	10/17/11	BC

NOTES: UNLESS OTHERWISE SPECIFIED

1. INDICATED DIMENSIONS ARE FOR AN ARRAY SIZE OF 324x256.
2. CONNECTOR INTERFACE: HIROSE 50 PIN DF12-50DS-0.5V(86). MATING CONNECTOR P/N DF12(5.0)-50DP-0.5V(86). FOR PIN-OUT DESIGNATIONS SEE TAU CAMERA USERS MANUAL.
3. INDICATED TOLERANCES APPLY TO CAMERA MOUNTING SURFACES ONLY. OTHER SURFACES ARE CAST AND HAVE DRAFT.
4. INDICATED ALLOWABLE TRAVEL FOR FOCUS.
5. CAMERA WEIGHT NO LENS: 50.5 GRAMS, LENS WEIGHT, 13mm-f1.25: 19.6 GRAMS TOTAL CAMERA WEIGHT: 70.1 GRAMS

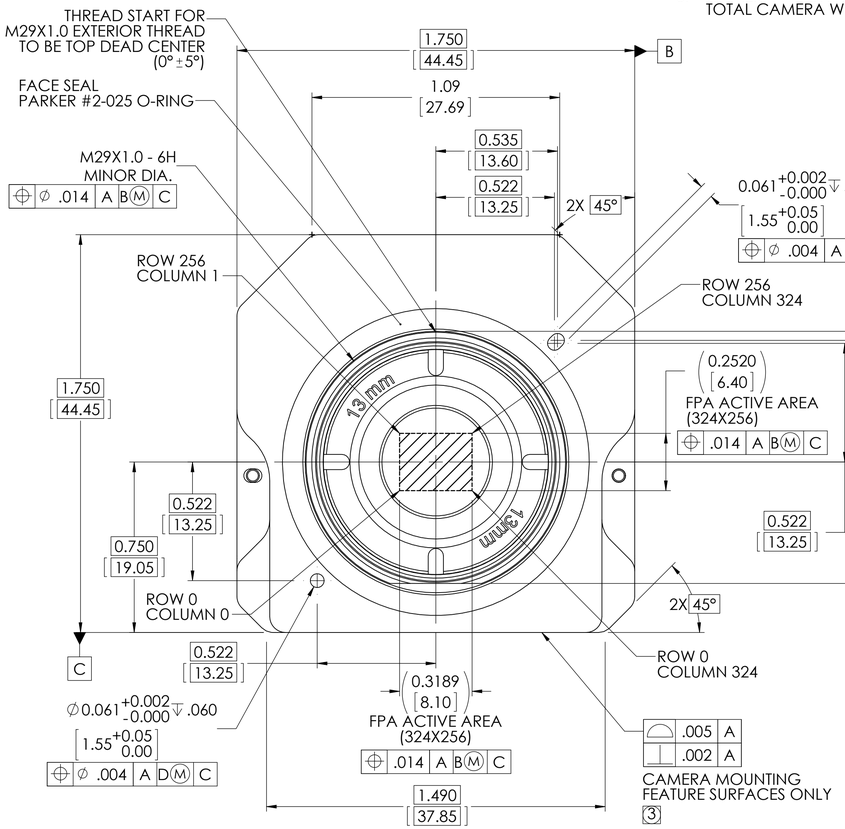

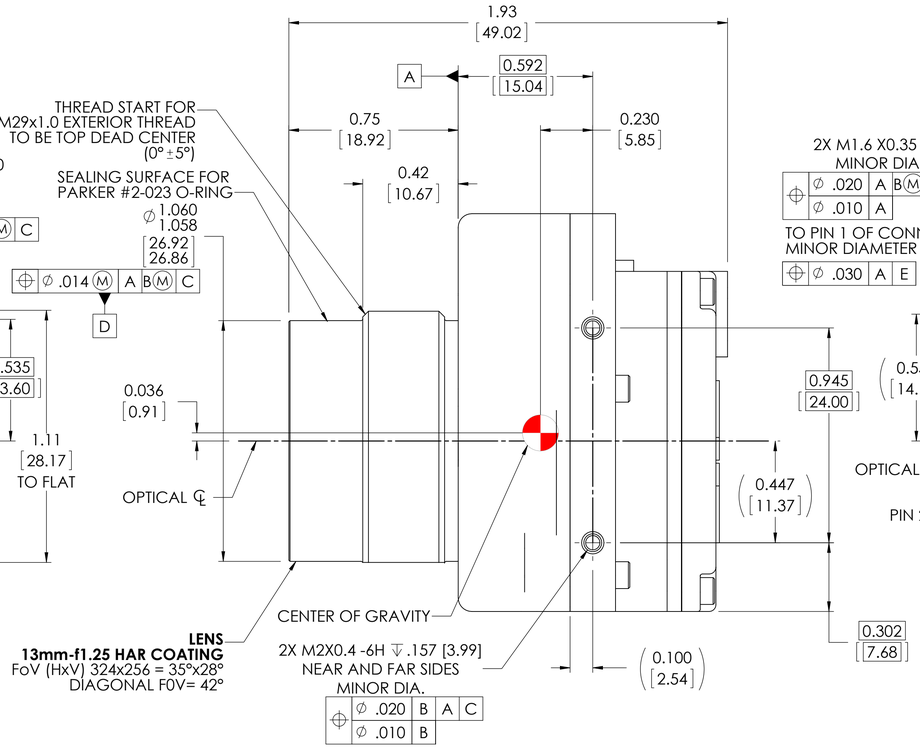

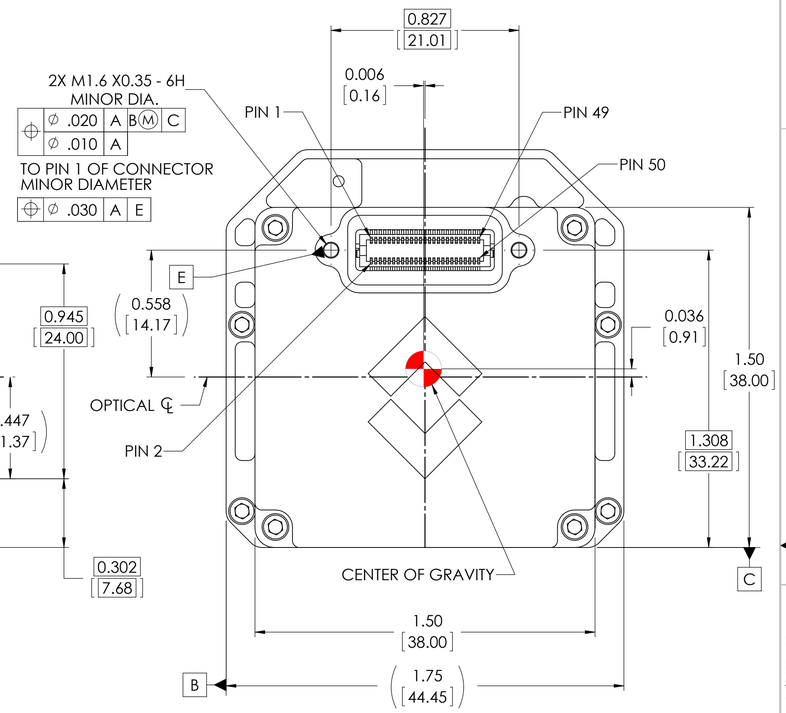

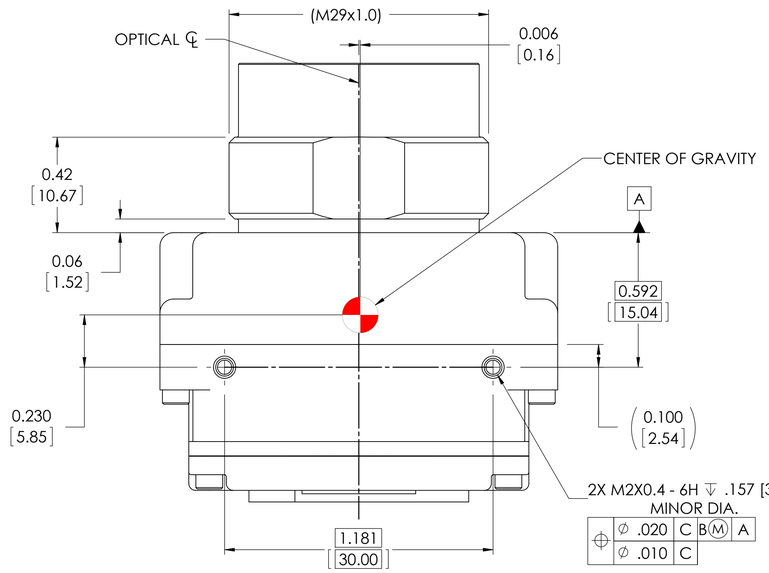

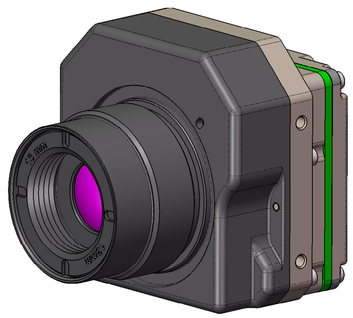

THIRD ANGLE PROJECTION

THIS DOCUMENT IS CONTROLLED TO FLIR TECHNOLOGY LEVEL 1.

THE INFORMATION CONTAINED IN THIS DOCUMENT PERTAINS TO A DUAL USE PRODUCT CONTROLLED FOR EXPORT BY THE EXPORT ADMINISTRATION REGULATIONS (EAR). FLIR TRADE SECRETS CONTAINED HEREIN ARE SUBJECT TO DISCLOSURE RESTRICTIONS AS A MATTER OF LAW. DIVERSION CONTRARY TO US LAW IS PROHIBITED. US DEPARTMENT OF COMMERCE AUTHORIZATION IS NOT REQUIRED PRIOR TO EXPORT OR TRANSFER TO FOREIGN PERSONS OR PARTIES UNLESS OTHERWISE PROHIBITED.

INTERPRET DRAWING PER ASME Y14.5M-1994

UNLESS OTHERWISE SPECIFIED
SURFACE ROUGHNESS 32
.X = ±.1
.XX = ±.01
.XXX = ±.005
ANGULAR = ±.5°
FILLET RADII = .005 MAX

MATERIAL

FINISH

UNLESS OTHERWISE SPECIFIED ALL MEASUREMENTS ARE IN INCHES. ALL DIMENSIONS IN [ ] ARE MM. DO NOT SCALE DRAWING.

CALC WT: 70.10 GRAMS

PROJECT NO.

APPROVALS	DATE
DWN M. HOPKINS	10/17/11
CHK	
DSGN	
ENG	
APP	

FLIR Systems, Inc.
70 Castilian Drive
Goleta, CA 93117

TITLE: IDD, TAU CAMERA, 13mm-f1.25, 25um 324x256

SIZE D | CAGE 064Y2 | DWG NO. 46-324, 13mm-f1.25 | REV 100

SCALE 3:1 | PRINTED: 11/2/2011 | SHEET 1 OF 2

SOLIDWORKS MODEL: 46-Tau Camera Core
MODEL REVISION: B-WC

DWG NO 46-324, 13mm-f1.25 SH 1 REV 100

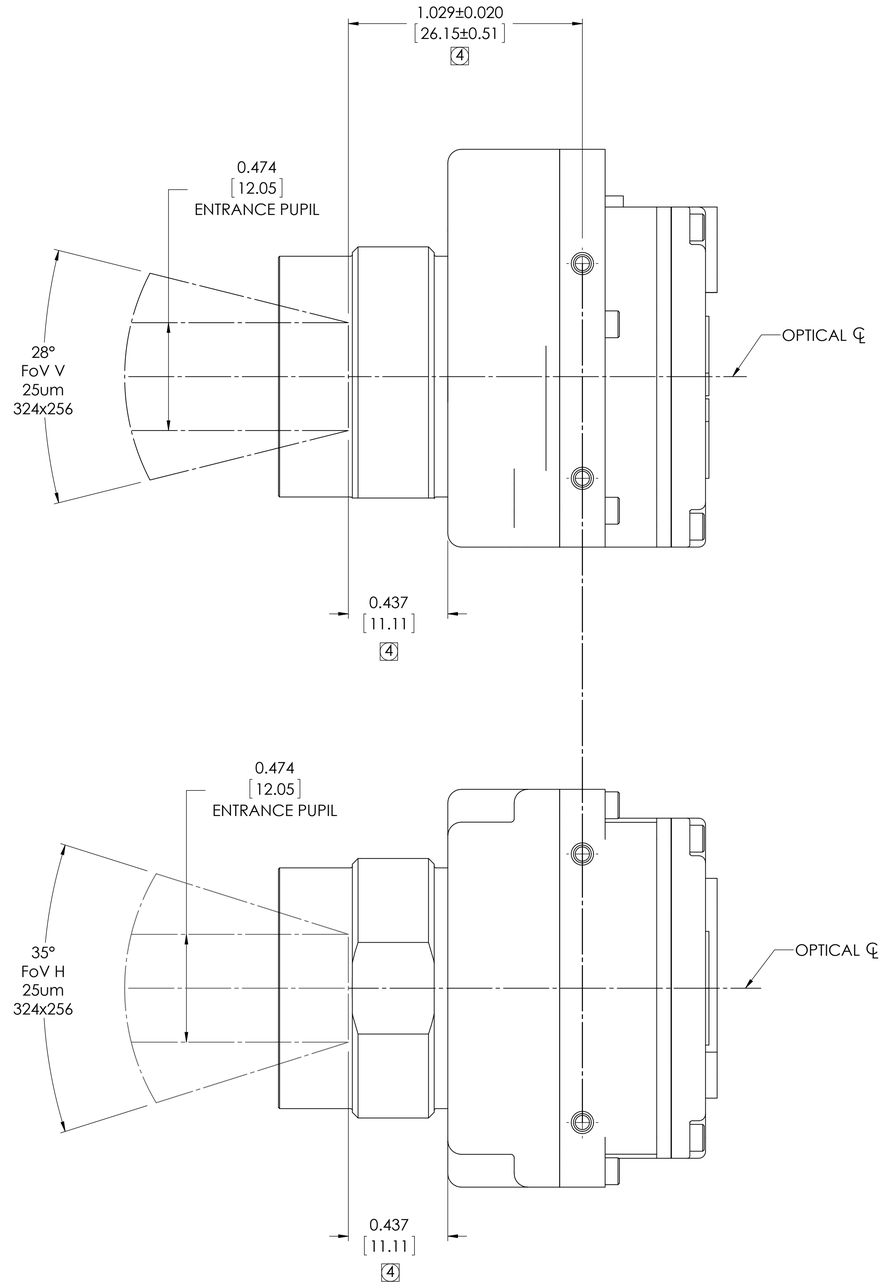

13 mm-f1.25
324x 256 ARRAY

IDD, TAU CAMERA,
13mm-f1.25, 25um 324x256

SIZE	CAGE	DWG NO.	REV
D	064Y2	46-324, 13mm-f1.25	100
SCALE 3:1	PRINTED: 11/2/2011	SHEET 2 OF 2	

SOLIDWORKS MODEL: 46-Tau Camera Core
MODEL REVISION:B-WC

DWG NO. 46-324, 13mm-f1.25 SH 2 REV 100

REVISIONS				
ZONE	REV	DESCRIPTION	DATE	APPROVED
	100	INITIAL RELEASE ECN 115992	10/17/11	BC

NOTES: UNLESS OTHERWISE SPECIFIED

1. INDICATED DIMENSIONS ARE FOR AN ARRAY SIZE OF 324x256.
2. CONNECTOR INTERFACE: HIROSE 50 PIN DF12-50DS-0.5V(86). MATING CONNECTOR P/N DF12(5.0)-50DP-0.5V(86). FOR PIN-OUT DESIGNATIONS SEE TAU CAMERA USERS MANUAL.
3. INDICATED TOLERANCES APPLY TO CAMERA MOUNTING SURFACES ONLY. OTHER SURFACES ARE CAST AND HAVE DRAFT.
4. INDICATED ALLOWABLE TRAVEL FOR FOCUS.
5. CAMERA WEIGHT NO LENS: 50.5 GRAMS, LENS WEIGHT, 19mm-f1.25: 19.7 GRAMS TOTAL CAMERA WEIGHT: 70.2 GRAMS

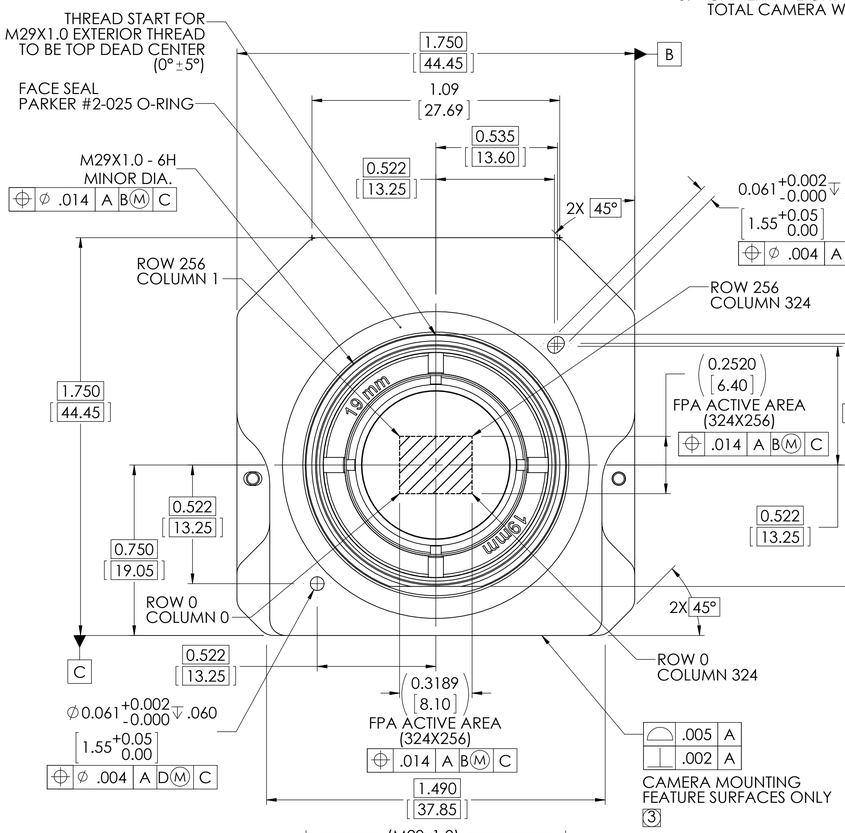

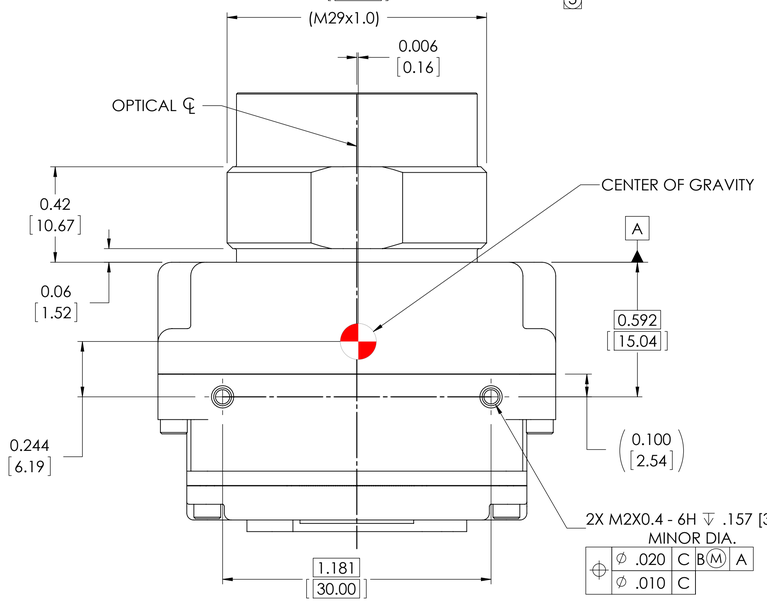

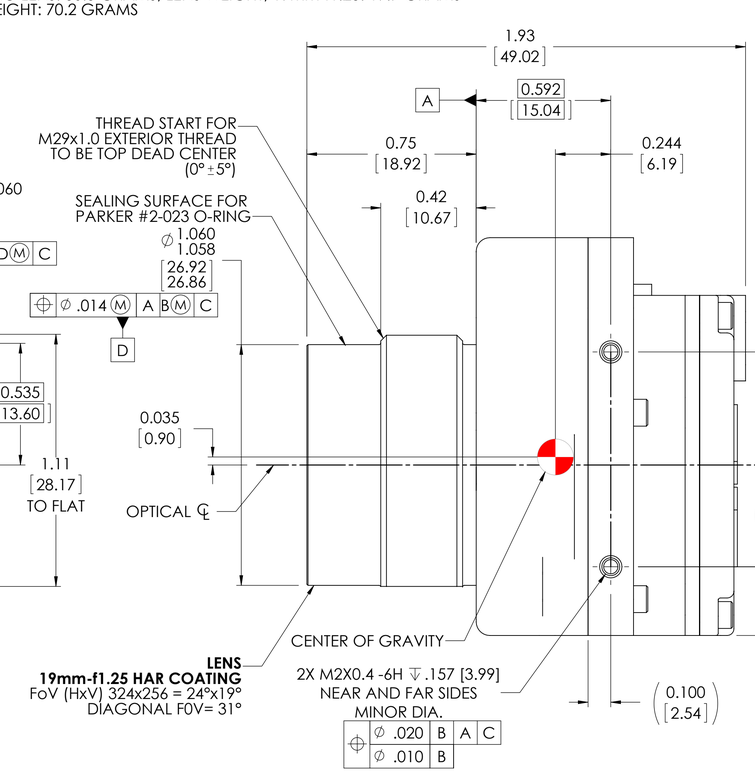

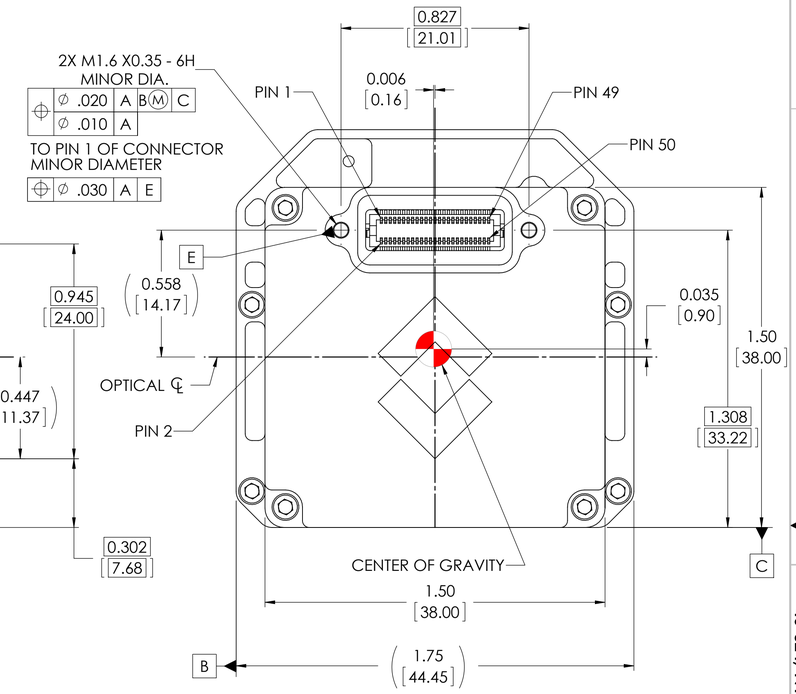

THIRD ANGLE PROJECTION	THIS DOCUMENT IS CONTROLLED TO FLIR TECHNOLOGY LEVEL 1.		
	THE INFORMATION CONTAINED IN THIS DOCUMENT PERTAINS TO A DUAL USE PRODUCT CONTROLLED FOR EXPORT BY THE EXPORT ADMINISTRATION REGULATIONS (EAR). FLIR TRADE SECRETS CONTAINED HEREIN ARE SUBJECT TO DISCLOSURE RESTRICTIONS AS A MATTER OF LAW. DIVERSION CONTRARY TO US LAW IS PROHIBITED. US DEPARTMENT OF COMMERCE AUTHORIZATION IS NOT REQUIRED PRIOR TO EXPORT OR TRANSFER TO FOREIGN PERSONS OR PARTIES UNLESS OTHERWISE PROHIBITED.		
INTERPRET DRAWING PER ASME Y14.5M-1994 UNLESS OTHERWISE SPECIFIED SURFACE ROUGHNESS 32 .X = ±.1 .XX = ±.01 .XXX = ±.005 ANGULAR = ±.5° FILLET RADII = .005 MAX	MATERIAL FINISH UNLESS OTHERWISE SPECIFIED ALL MEASUREMENTS ARE IN INCHES. ALL DIMENSIONS IN [ ] ARE MM. DO NOT SCALE DRAWING. CALC WT: 70.20 GRAMS	PROJECT NO. APPROVALS / DATE DWN M. HOPKINS 10/17/11 CHK DSGN ENG APP	FLIR Systems, Inc. 70 Castilian Drive Goleta, CA 93117 TITLE: IDD, TAU CAMERA, 19mm-f1.25, 25um 324x256 SIZE D | CAGE 064Y2 | DWG NO. 46-324, 19mm-f1.25 | REV 100 SCALE 3:1 | PRINTED: 11/2/2011 | SHEET 1 OF 2

SOLIDWORKS MODEL: 46-Tau Camera Core
MODEL REVISION: B-WC

DWG NO. 46-324, 19mm-f1.25 SH 1 REV 100

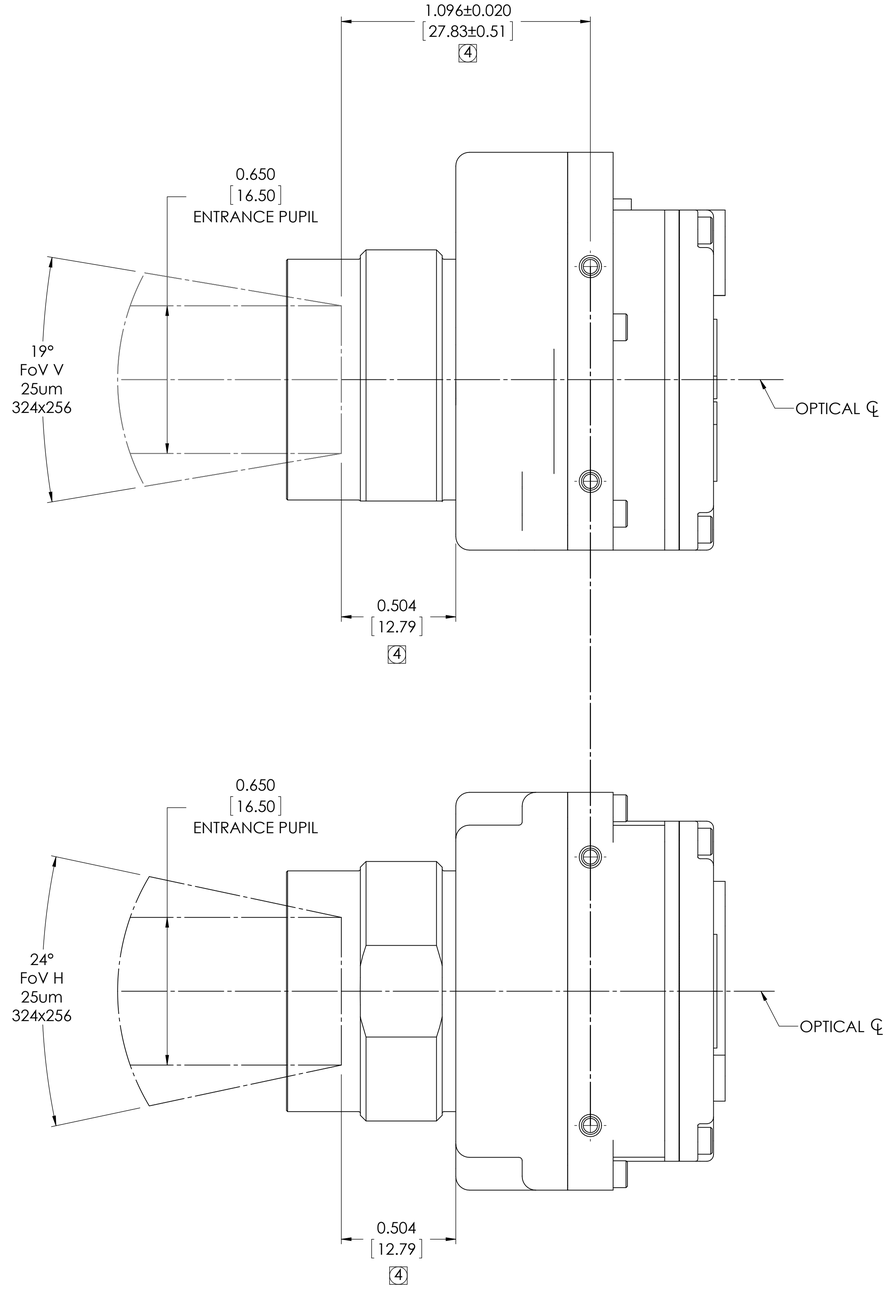

19 mm-f1.25
324x 256 ARRAY

IDD, TAU CAMERA,
19mm-f1.25, 25um 324x256

SIZE	CAGE	DWG NO.	REV
D	064Y2	46-324, 19mm-f1.25	100
SCALE 3:1	PRINTED: 11/2/2011	SHEET 2 OF 2	

SOLIDWORKS MODEL: 46-Tau Camera Core
MODEL REVISION:B-WC

DWG NO. 46-324, 19mm-f1.25 SH 2 REV 100

REVISIONS				
ZONE	REV	DESCRIPTION	DATE	APPROVED
	100	INITIAL RELEASE ECN 116015	10/17/11	BC

NOTES: UNLESS OTHERWISE SPECIFIED

1. INDICATED DIMENSIONS ARE FOR AN ARRAY SIZE OF 324x256.
2. CONNECTOR INTERFACE: HIROSE 50 PIN DF12-50DS-0.5V(86). MATING CONNECTOR P/N DF12(5.0)-50DP-0.5V(86). FOR PIN-OUT DESIGNATIONS SEE TAU CAMERA USERS MANUAL.
3. INDICATED TOLERANCES APPLY TO CAMERA MOUNTING SURFACES ONLY. OTHER SURFACES ARE CAST AND HAVE DRAFT.
4. INDICATED ALLOWABLE TRAVEL FOR FOCUS.
5. CAMERA WEIGHT NO LENS: 52.1 GRAMS, LENS WEIGHT, 25mm-f1.1: 58.9 GRAMS TOTAL CAMERA WEIGHT: 111.0 GRAMS

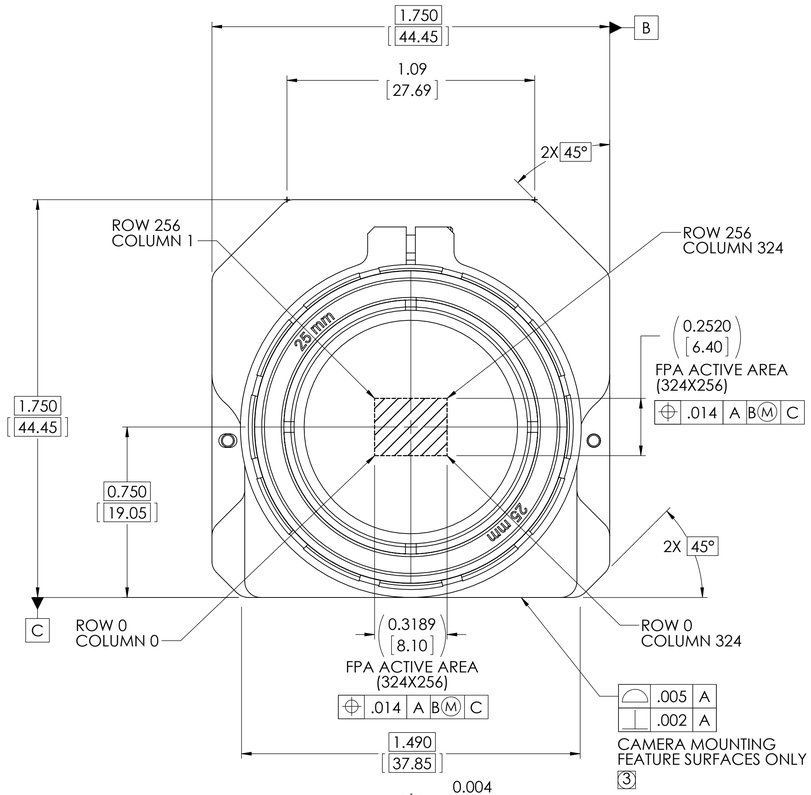

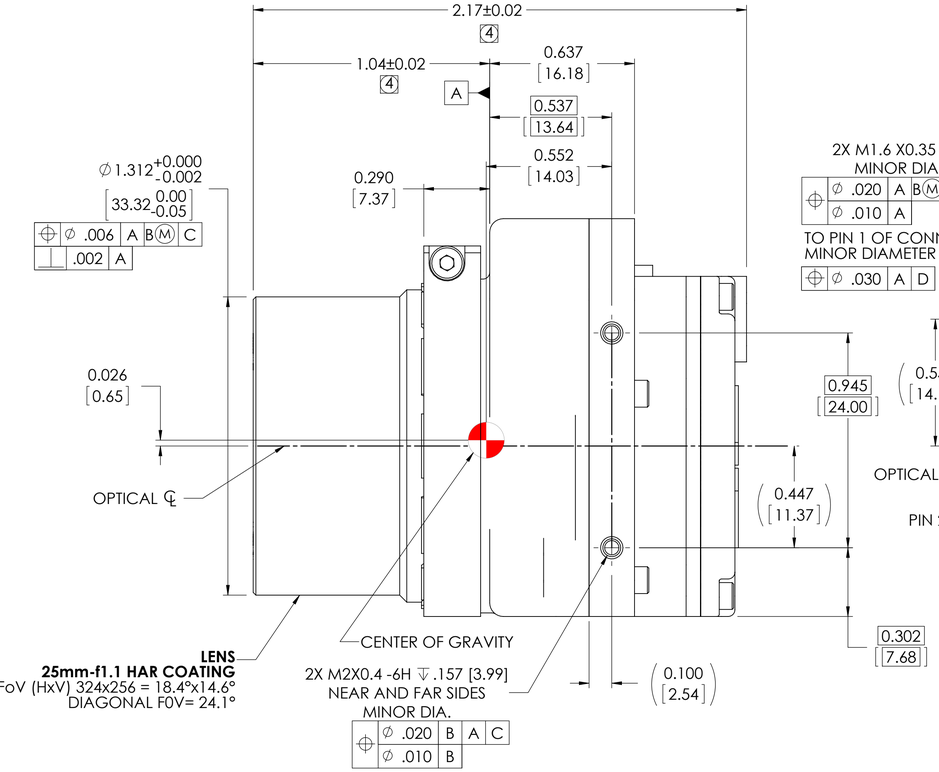

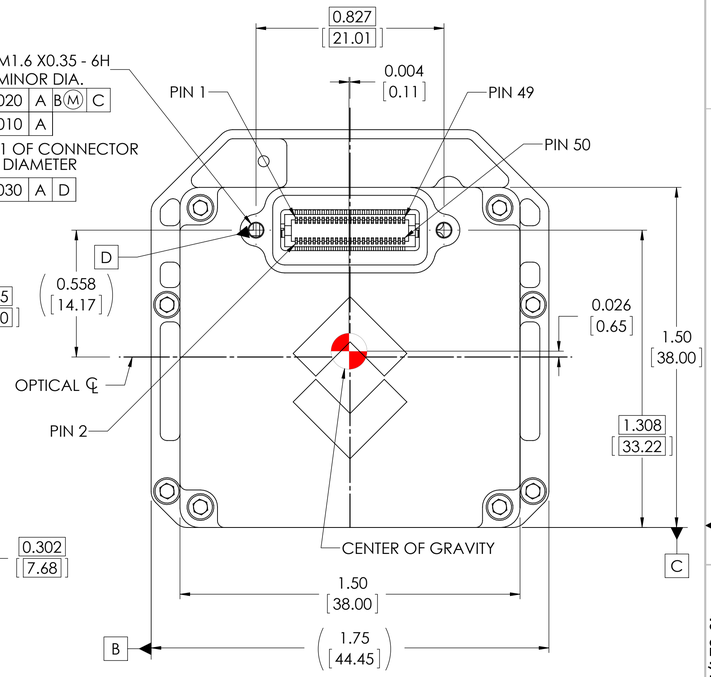

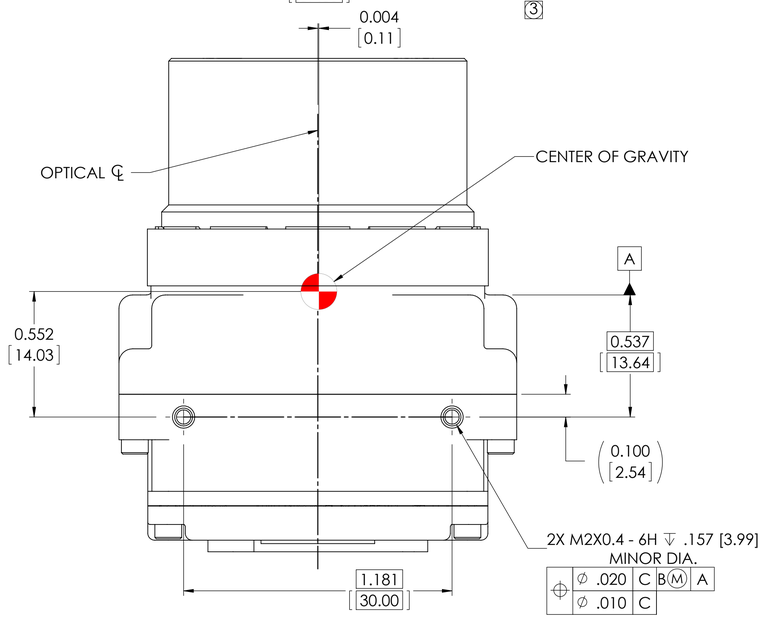

THIRD ANGLE PROJECTION	THIS DOCUMENT IS CONTROLLED TO FLIR TECHNOLOGY LEVEL 1.		
	THE INFORMATION CONTAINED IN THIS DOCUMENT PERTAINS TO A DUAL USE PRODUCT CONTROLLED FOR EXPORT BY THE EXPORT ADMINISTRATION REGULATIONS (EAR). FLIR TRADE SECRETS CONTAINED HEREIN ARE SUBJECT TO DISCLOSURE RESTRICTIONS AS A MATTER OF LAW. DIVERSION CONTRARY TO US LAW IS PROHIBITED. US DEPARTMENT OF COMMERCE AUTHORIZATION IS NOT REQUIRED PRIOR TO EXPORT OR TRANSFER TO FOREIGN PERSONS OR PARTIES UNLESS OTHERWISE PROHIBITED.		
INTERPRET DRAWING PER ASME Y14.5M-1994 UNLESS OTHERWISE SPECIFIED SURFACE ROUGHNESS 32 .X = ±.1 .XX = ±.01 .XXX = ±.005 ANGULAR = ±.5 ° FILLET RADII = .005 MAX	MATERIAL FINISH UNLESS OTHERWISE SPECIFIED ALL MEASUREMENTS ARE IN INCHES. ALL DIMENSIONS IN [ ] ARE MM. DO NOT SCALE DRAWING. CALC WT: 111.00 GRAMS	PROJECT NO. APPROVALS / DATE DWN M. HOPKINS 10/17/11 CHK DSGN ENG APP	FLIR Systems, Inc. 70 Castilian Drive Goleta, CA 93117 TITLE: IDD, TAU CAMERA, 25mm-f1.1, 25um 324x256 SIZE D | CAGE 064Y2 | DWG NO. 46-324, 25mm-f1.1 | REV 100 SCALE 3:1 | PRINTED: 11/3/2011 | SHEET 1 OF 2

SOLIDWORKS MODEL: 46-Tau Camera Core
MODEL REVISION: B-WC

DWG NO 46-324, 25mm-f1.1 | SH 1 | REV 100

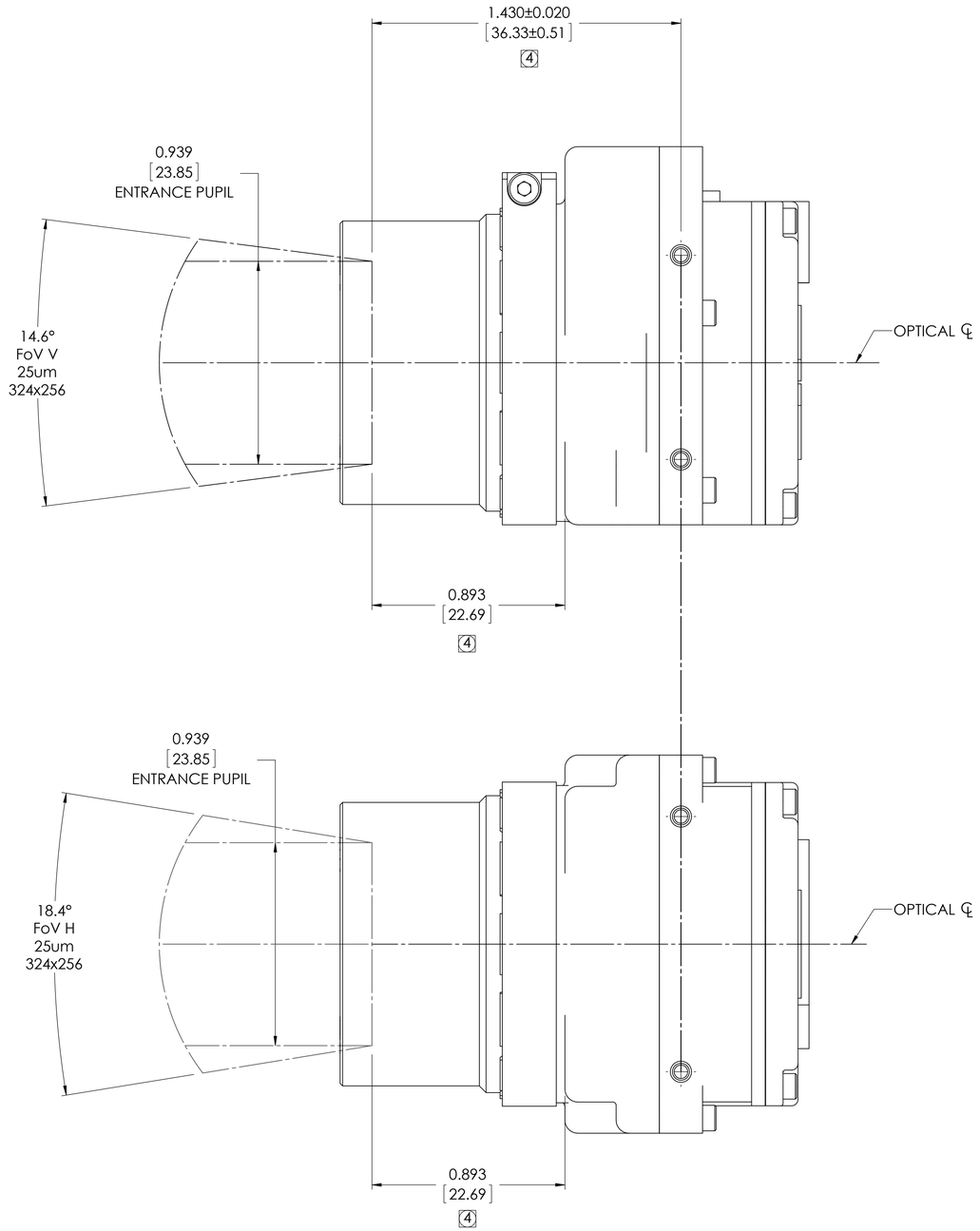

25 mm-f1.1
324x 256 ARRAY

IDD, TAU CAMERA,
25mm-f1.1, 25um 324x256

SIZE	CAGE	DWG NO.	REV
D	064Y2	**46-324, 25mm-f1.1**	100
SCALE 3:1	PRINTED: 11/3/2011	SHEET 2 OF 2	

SOLIDWORKS MODEL: 46-Tau Camera Core
MODEL REVISION:B-WC

DWG NO 46-324, 25mm-f1.1 | SH 2 | REV 100